Network Models

2-1 LAYERED TASKS

We use the concept of layers in our daily life. As an example, let us consider two friends who communicate through postal mail. The process of sending a letter to a friend would be complex if there were no services available from the post office.

Topics discussed in this section:

Sender, Receiver, and Carrier
Hierarchy

Figure 2.1 Tasks involved in sending a letter

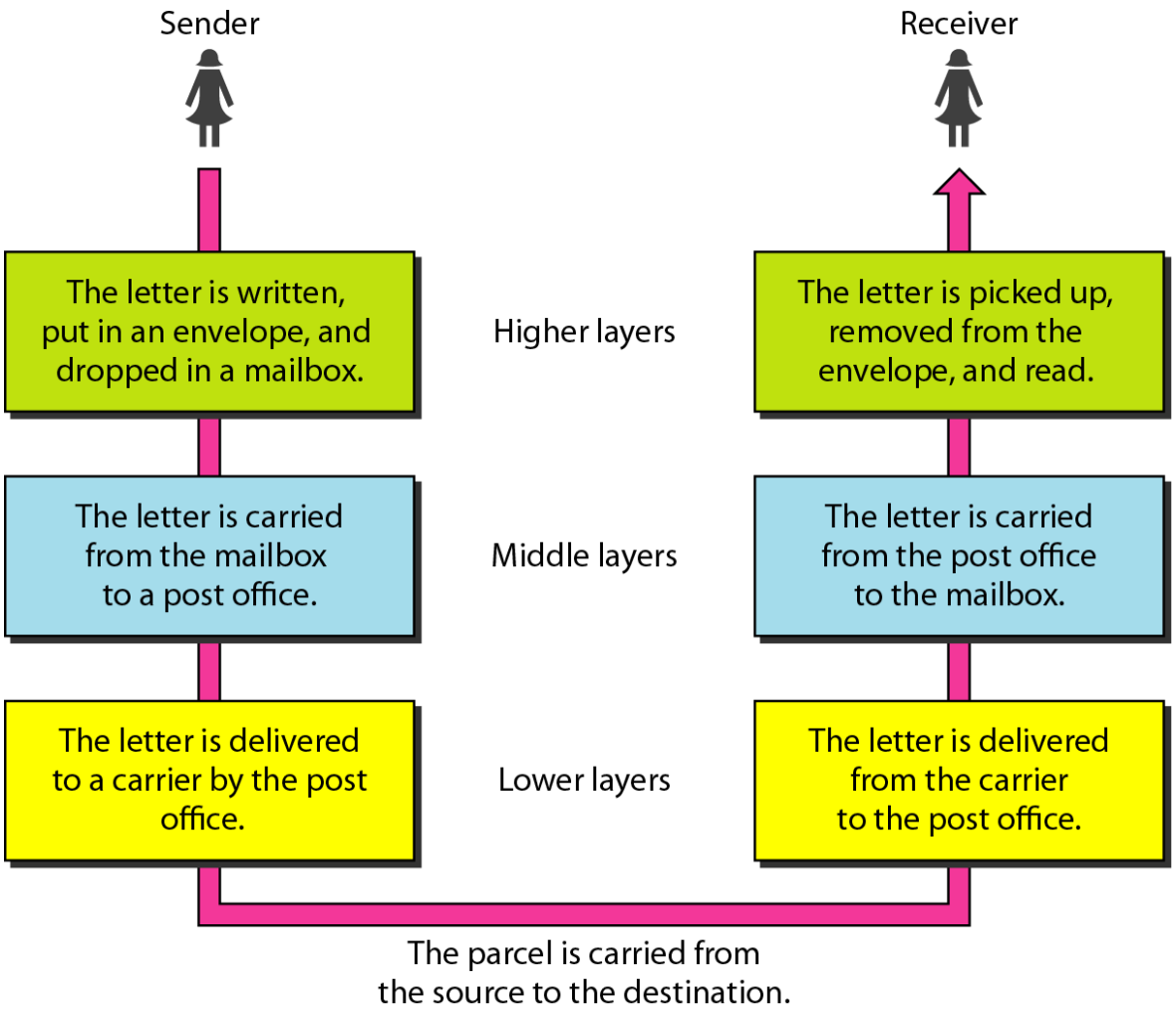

2-2 THE OSI MODEL

Established in 1947, the International Standards Organization (ISO) is a multinational body dedicated to worldwide agreement on international standards. An ISO standard that covers all aspects of network communications is the Open Systems Interconnection (OSI) model. It was first introduced in the late 1970s.

Topics discussed in this section:

Layered Architecture
Peer-to-Peer Processes
Encapsulation

Note

ISO is the organization.
OSI is the model.

Figure 2.2 Seven layers of the OSI model

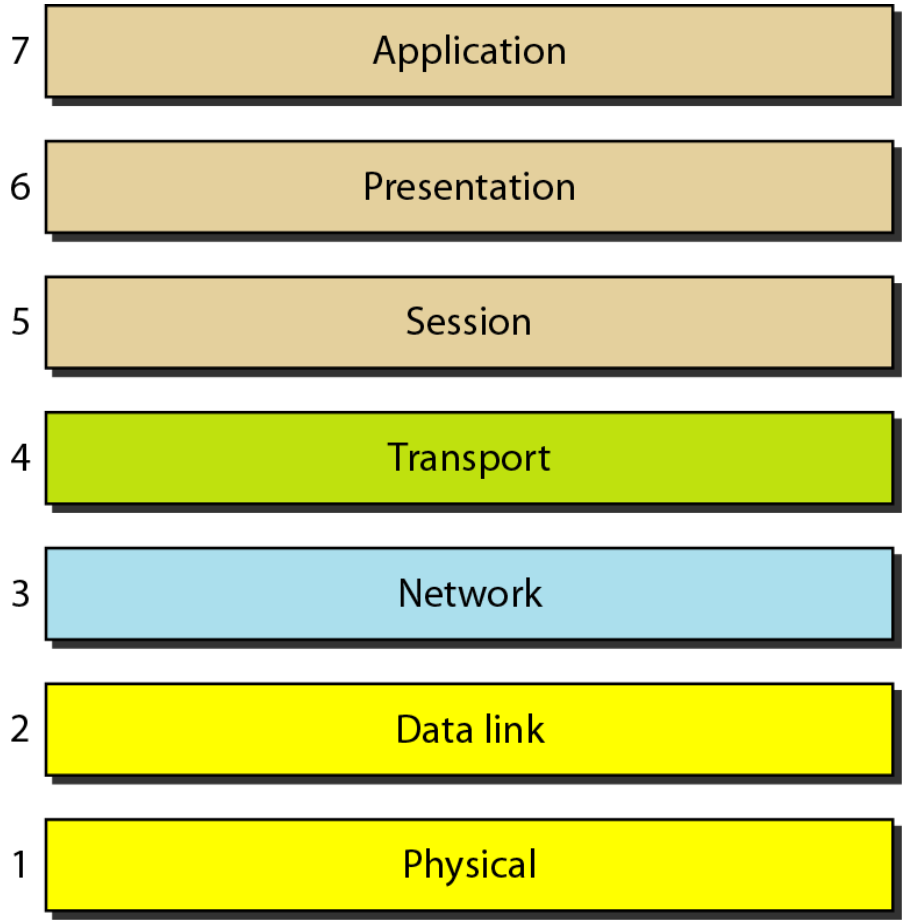

Peer-to-Peer Process

- Within a single machine, each layer calls upon services of the layer just below it.
- Layer 3, for example, uses the services provided by layer 2 and provides services for layer 4.
- Between machines, layer x on one machine communicates with layer x on another machine, by using a protocol (**this is Peer-to-Peer Process**).
- Communication between machines is therefore a peer-to-peer process using protocols appropriate to a given layer.

Figure 2.3 The interaction between layers in the OSI model

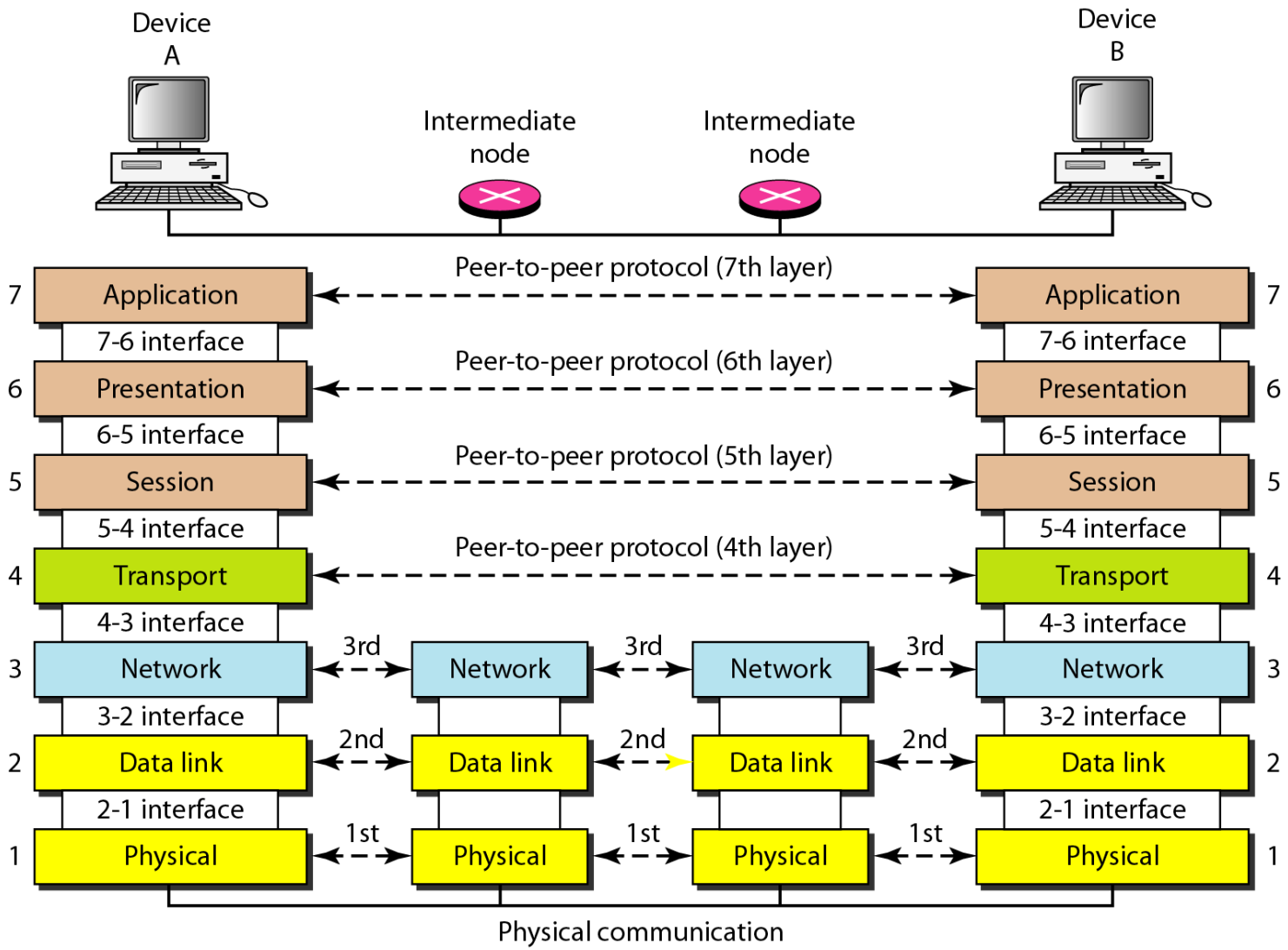

Figure 2.4 An exchange using the OSI model

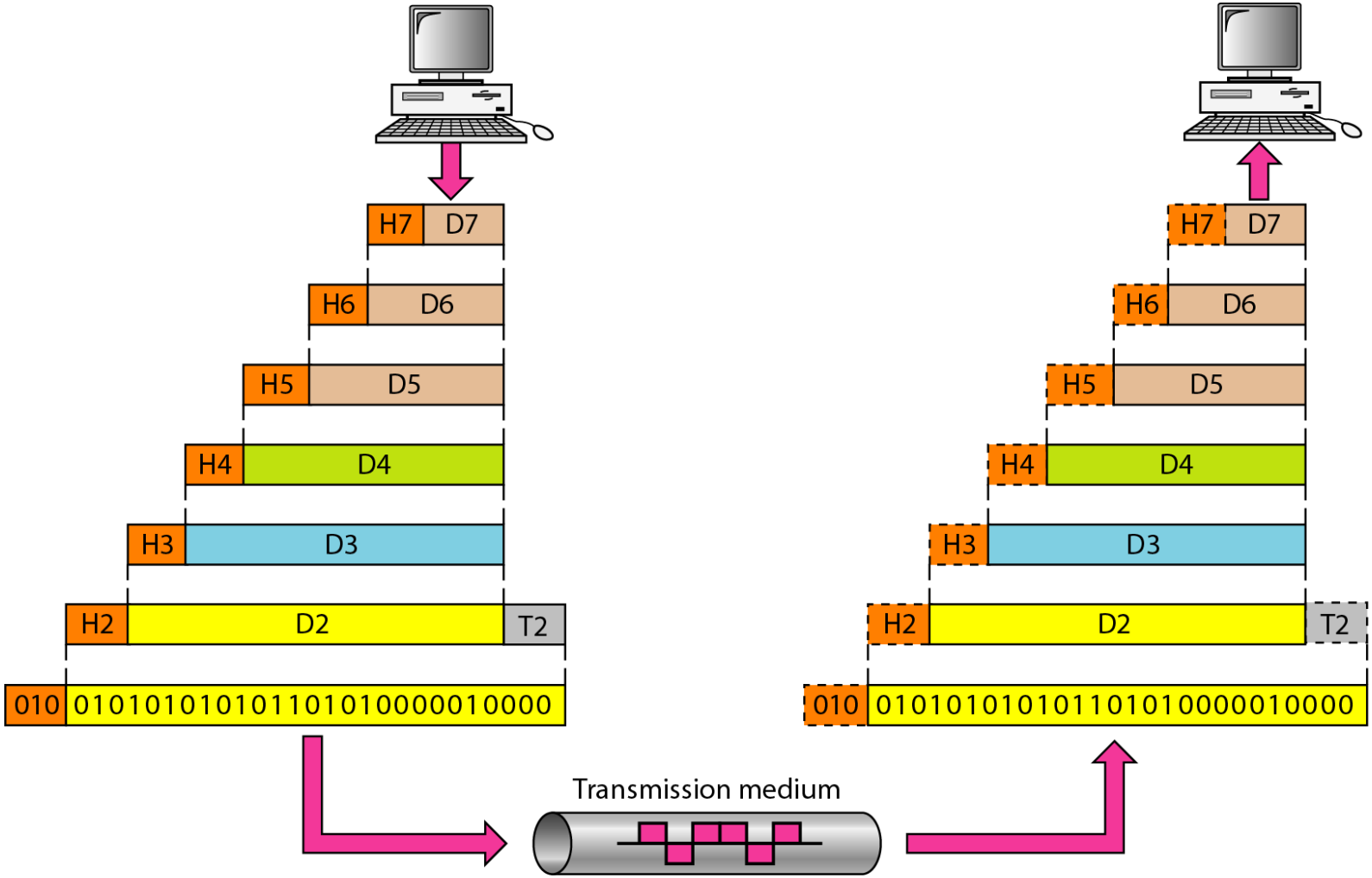

2-3 LAYERS IN THE OSI MODEL

In this section we briefly describe the functions of each layer in the OSI model.

Topics discussed in this section:

- Physical Layer
- Data Link Layer
- Network Layer
- Transport Layer
- Session Layer
- Presentation Layer
- Application Layer

Figure 2.5 Physical layer

The physical layer is responsible for movements of individual bits from one hop (node) to the next.

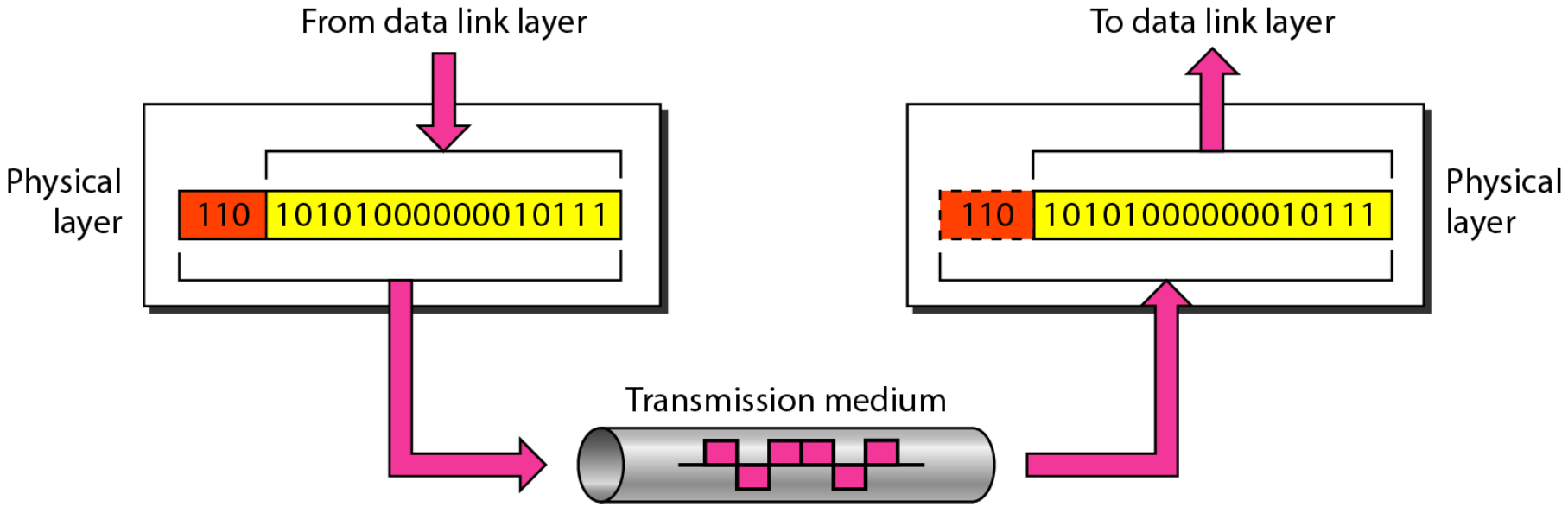

Physical layer

The physical layer is concerned with the following:

- **Physical characteristics of interfaces and media:** It define the type of transmission media
- **Representation of the bits:** the physical layer data consist of a stream of bits(0,1). The transmitted bits must be encoded into signals – **electrical or optical**. The physical layer defines the type of **encoding**.
- **Data rate:** The physical layer defines the **transmission rate**, the number of bits sent each second.

Physical Layer

- Line configuration: the physical layer is concerned with the connection of devices to the medium.
- Physical topology – Ring, star
- Transmission Mode - Simplex, Half duplex Full Duplex

Figure 2.6 Data link layer

The data link layer is responsible for moving frames from one hop (node) to the next.

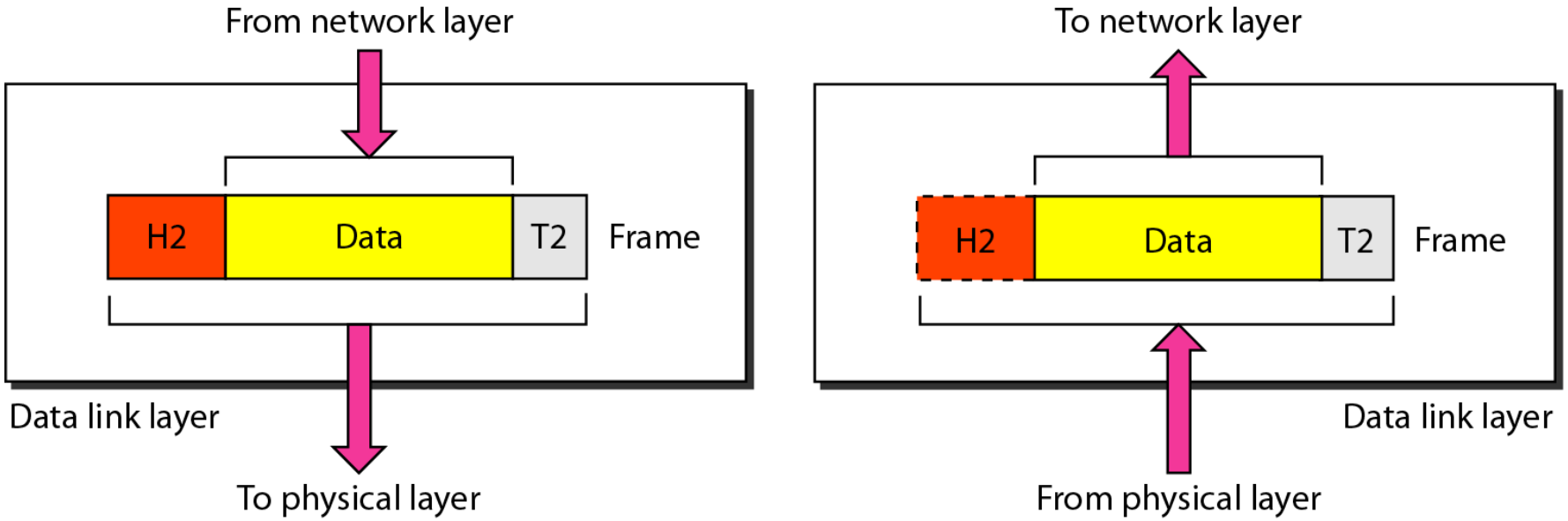

It is responsible for node-to-node delivery of data.

Functions of the Data Link Layer:

- Framing. The data link layer divides the **stream of bits** received from the network layer into data units called **frames**.

- Physical addressing. If frames are to be distributed to different systems on the network, the data link layer adds a header to the frame to define the physical address of the sender (source address) and/or receiver (destination address) of the frame.

- If the frame is intended for a system outside the sender's network, the receiver address is the address of the device that connects one network to the next.

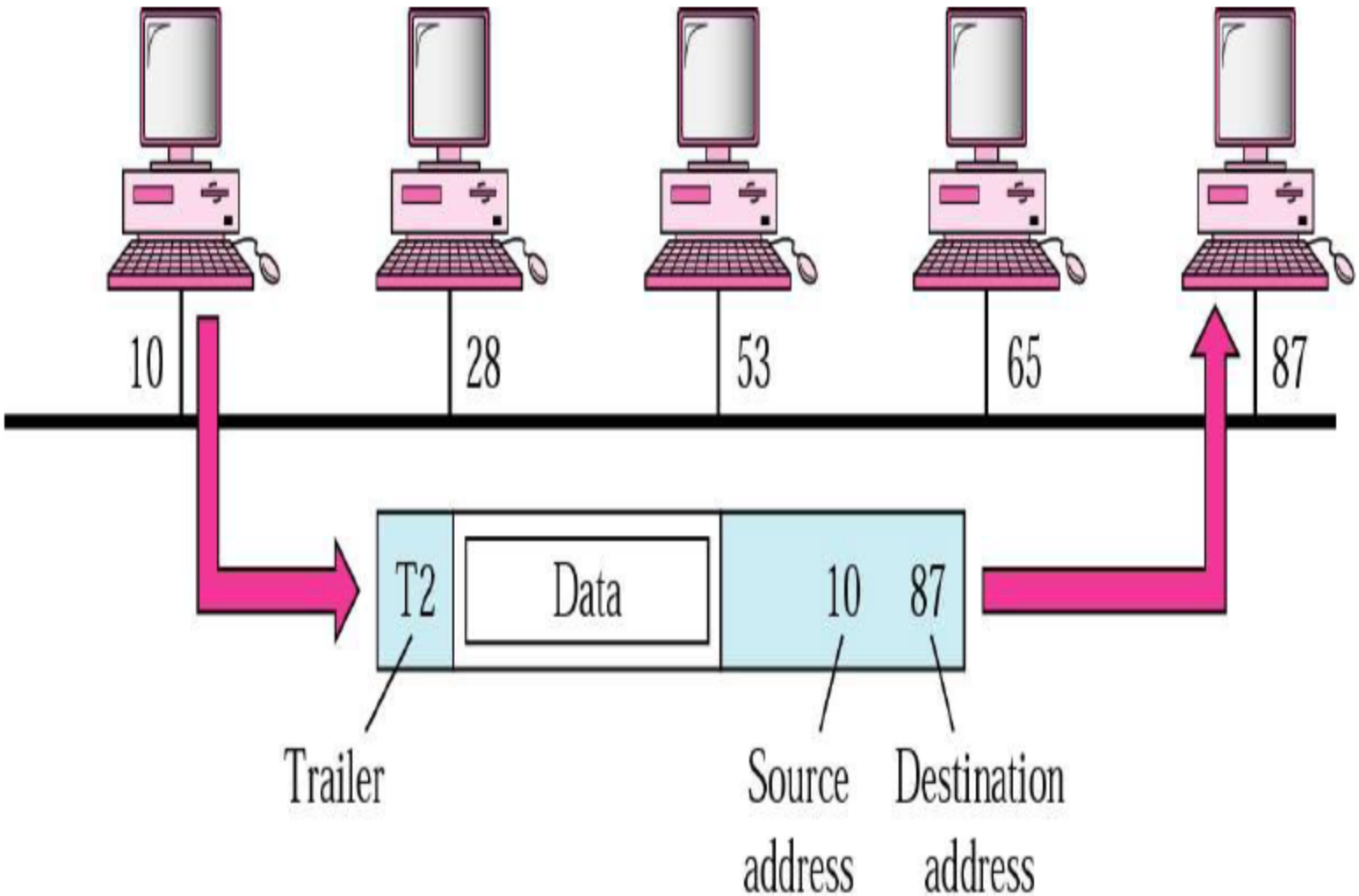
10
28
53
65
87
T2
Data
10
87
Trailer
Source address
Destination address

- Flow Control. If the rate at which the data are absorbed by the receiver is less than the rate produced in the sender, the data link layer imposes a flow control mechanism to prevent overwhelming the receiver.
- Error control. The data link layer adds reliability to the physical layer by adding mechanisms to detect and retransmit damaged or lost frames. Error control is normally achieved through a trailer to the end of the frame.

- Access Control. When two or more devices are connected to the same link, data link layer protocols are necessary to determine which device has control over the link at any time.

Figure 2.7 Hop-to-hop delivery

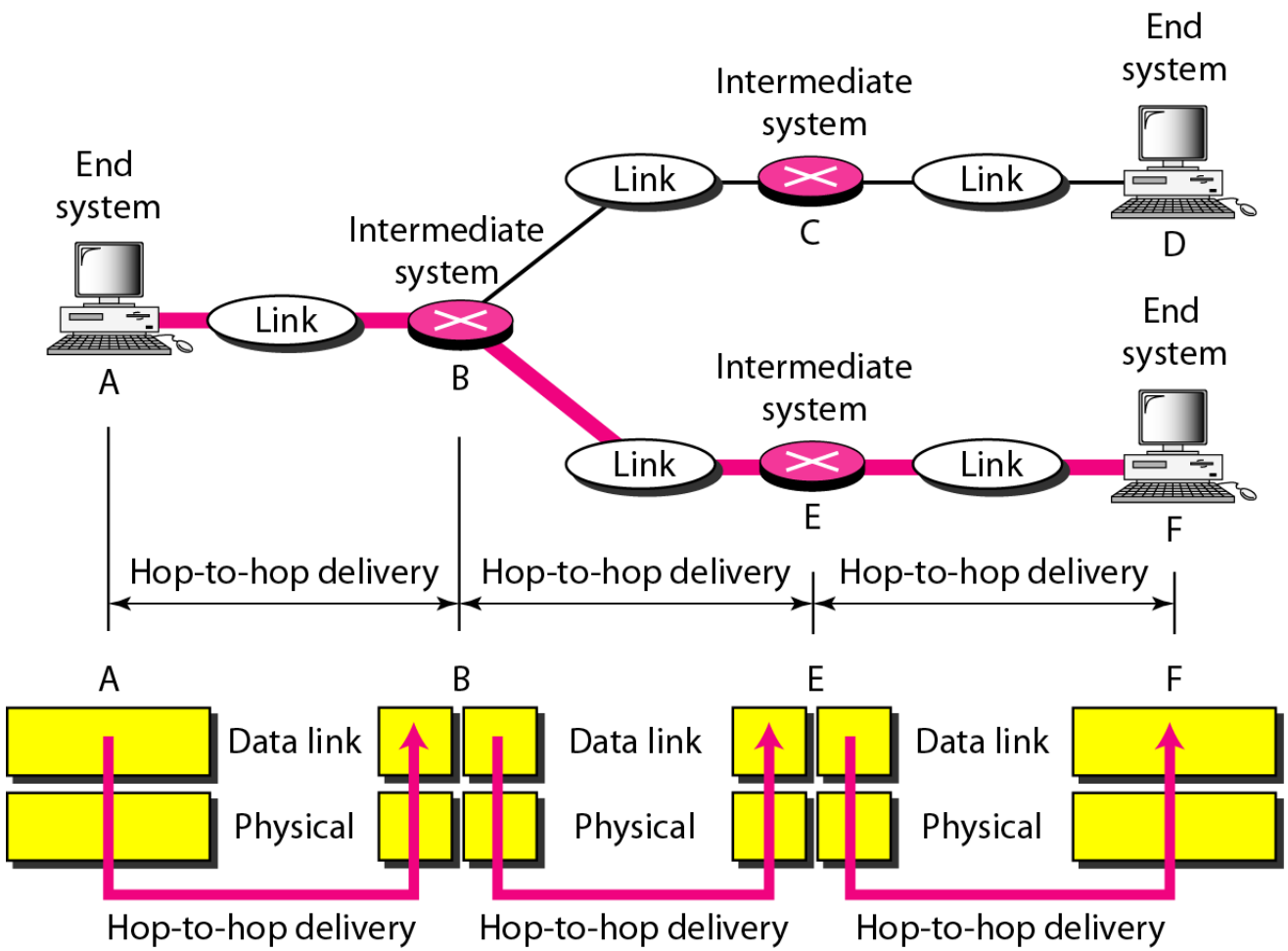

Figure 2.8 Network layer

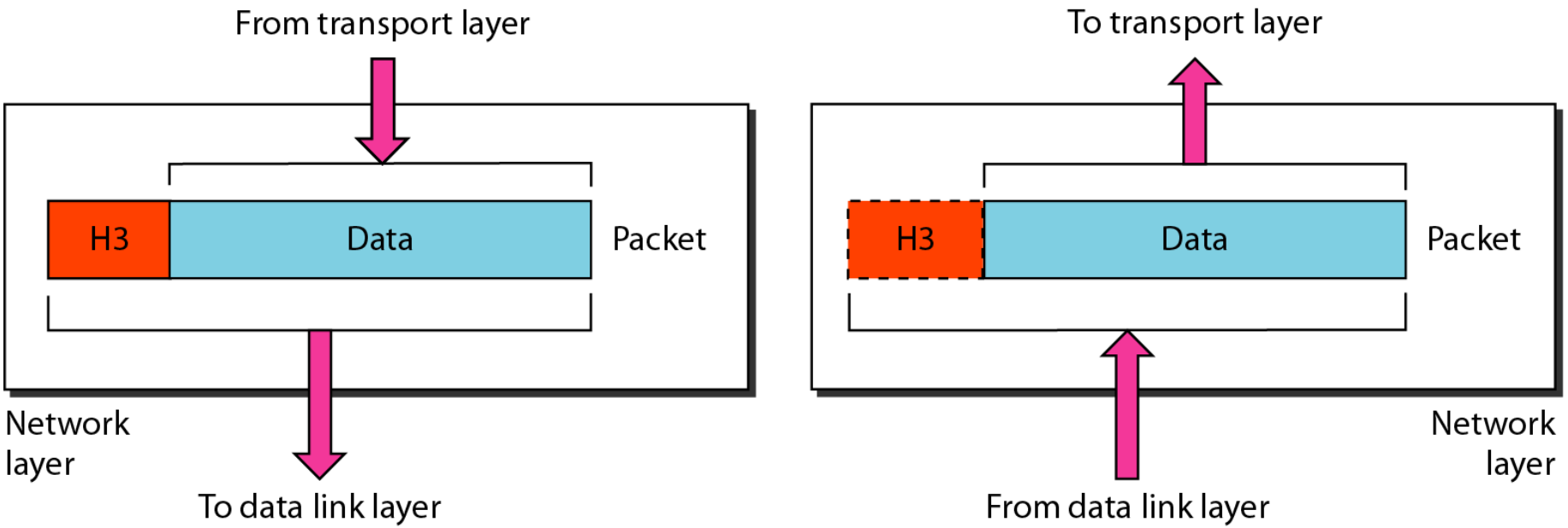

The network layer is responsible for the delivery of individual packets from the source host to the destination host.

Figure 2.9 Source-to-destination delivery

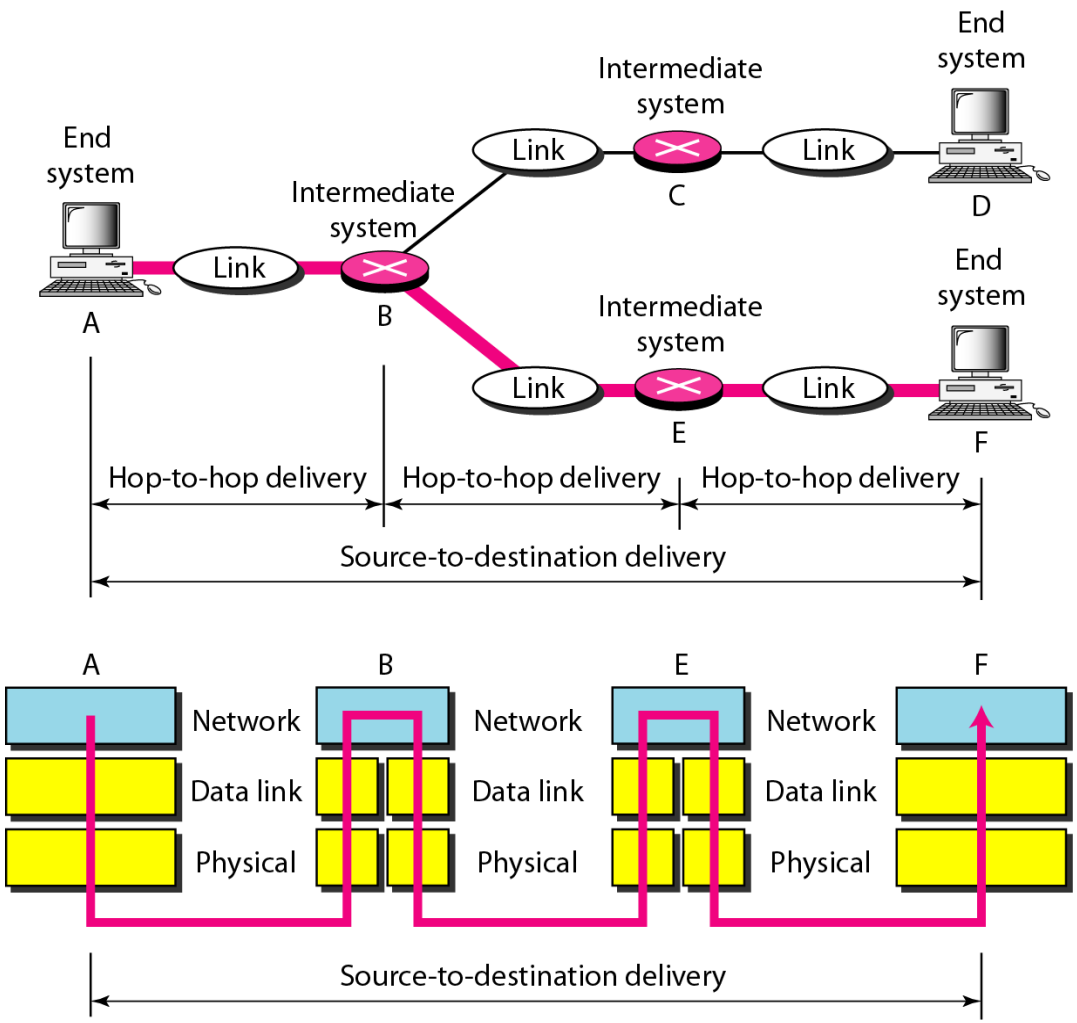

3. Network Layer

•The Network layer is responsible for the **source-to-destination**
delivery of a packet possible across multiple networks.

•It converts **Frames into packets.**

•If **two systems are connected to the same link**, there is usually **no need for a network layer**. However, if the two systems are attached to different networks, there is often a need for the network layer to accomplish source-to-destination delivery.

Network Layer

Functions:

•Logical addressing-Physical addressing (May change) handle addressing problem locally

•If packet pass the network boundary, we need another addressing called logical addressing (Never change)

•Routing - Route the packet to final destination

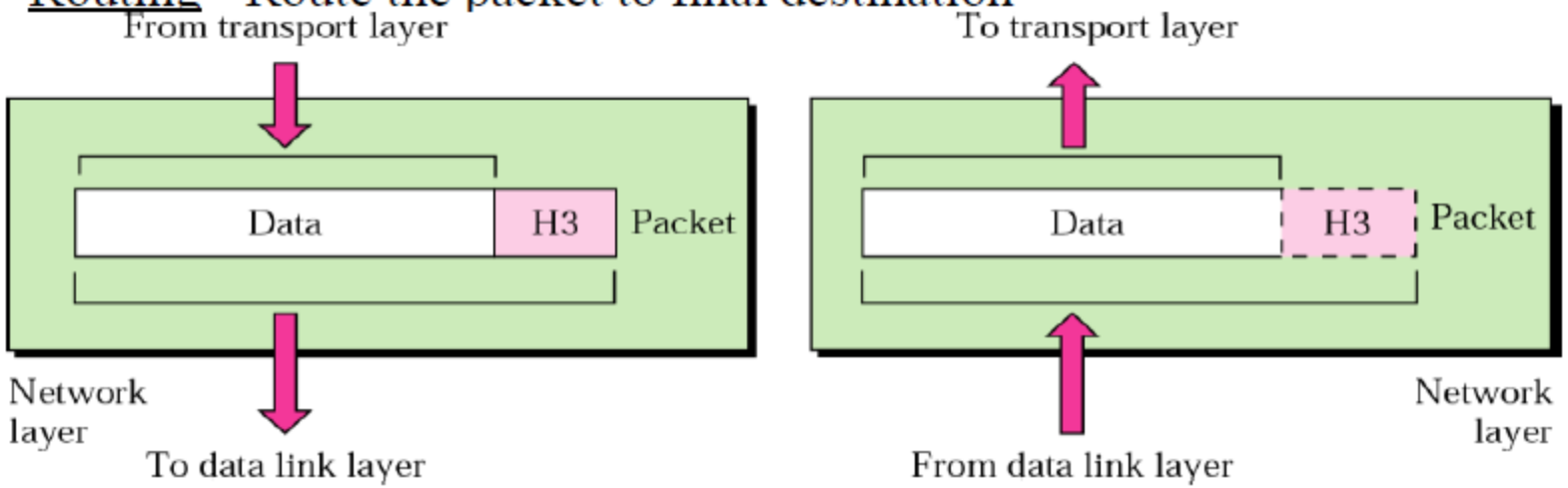

The network layer is responsible for the delivery of packets from the original source to the final destination.

Figure 2.10 Transport layer

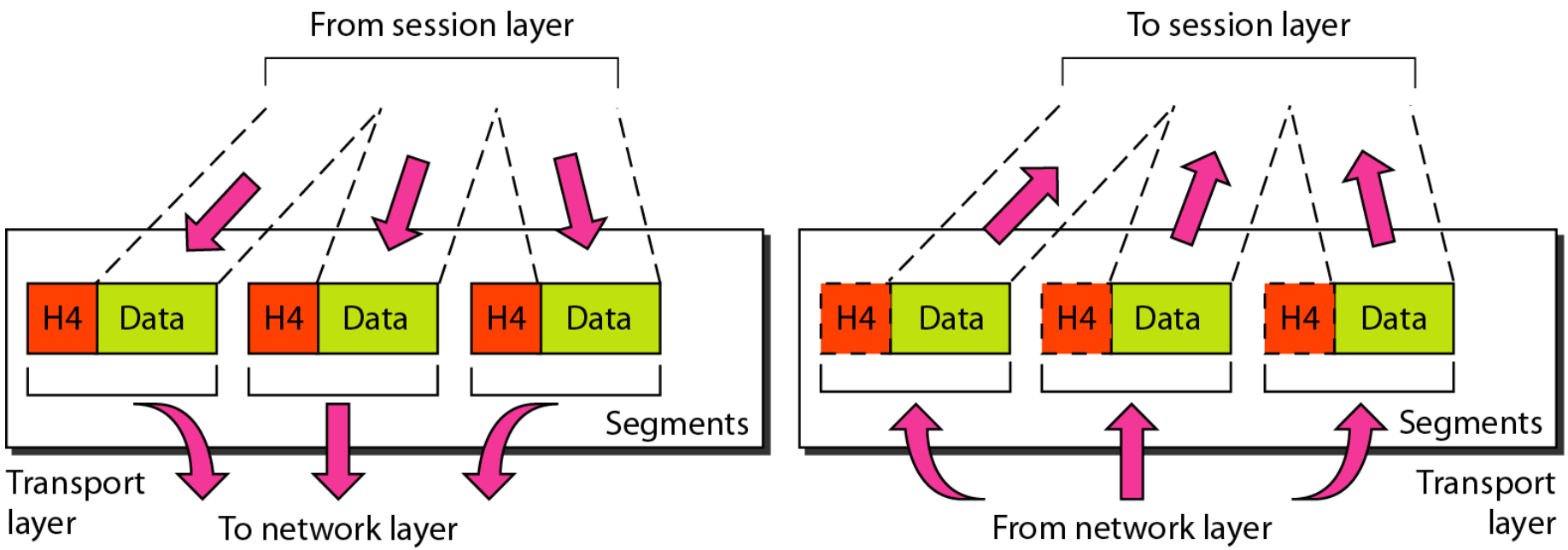

The transport layer is responsible for the delivery of a message from one process to another.

4. Transport Layer

- The transport layer is responsible for **process-to-process or end-end** delivery of the entire message.
- The network layer oversees host-to-destination delivery of individual packets, it does not recognize any relationship between those packets.
- The transport layer ensures that the whole message arrives intact and in order, overseeing both error control and flow control at the process-to-process level.

Figure 2.11 Reliable process-to-process delivery of a message

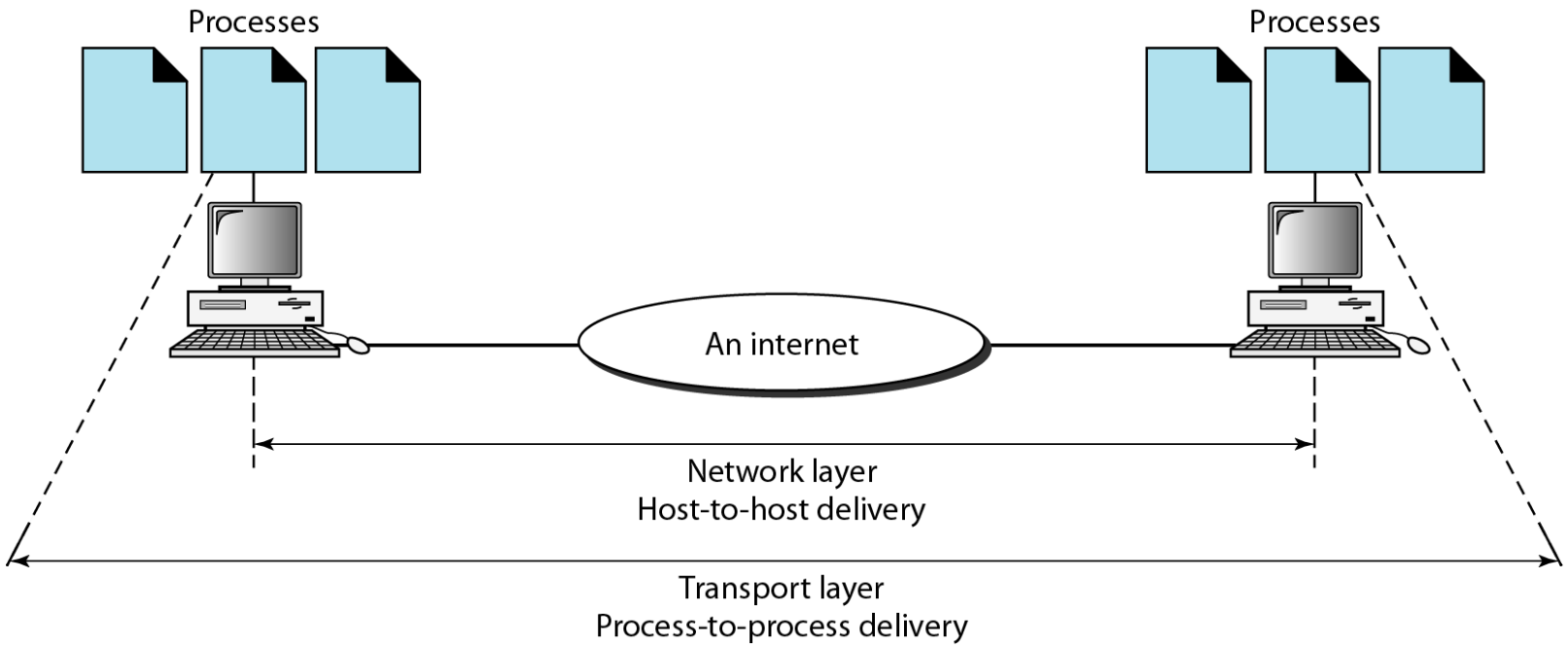

Functions of the Transport layer

Service point addressing:

Computer often run several processes (running programs) at the same time. Process-to-process delivery means delivery from a specific process on one computer to a specific process on the other.

- The transport layer header include a type of address called **port address**.
- The network layer gets each packet to the correct computer; the transport layer gets the entire message to the correct process on that computer.

- **Segmentation and reassembly**: a message is **divided into transmittable segments**, each having a **sequence number**. These numbers enable the transport layer to reassemble the message correctly upon arrival at the destination.
- **Connection control**: The transport layer can be either connectionless or connection-oriented.
- A connectionless transport layer treats each segment as an independent packet and delivers it to the transport layer at the destination machine.
- A connection-oriented transport layer makes a connection with the transport layer at the destination machine first before delivering the packets. After all the data are transferred, the connection is terminated.

- **Flow control**: the transport layer performs a flow control end to end. The data link layer performs flow control across a single link.
- **Error control**: the transport layer performs error control end to end. The data link layer performs control across a single link.
- **Congestion control** concerns controlling traffic entry into a telecommunication networks so as to avoid congestive collapse by attempting to avoid oversubscription of any of the processing or link capabilities of the intermediate nodes and networks and taking resource reducing steps, such as reducing the rate of sending packets. It should not be confused with flow control, which prevents the sender from overwhelming the receiver.

Figure 2.12 Session layer

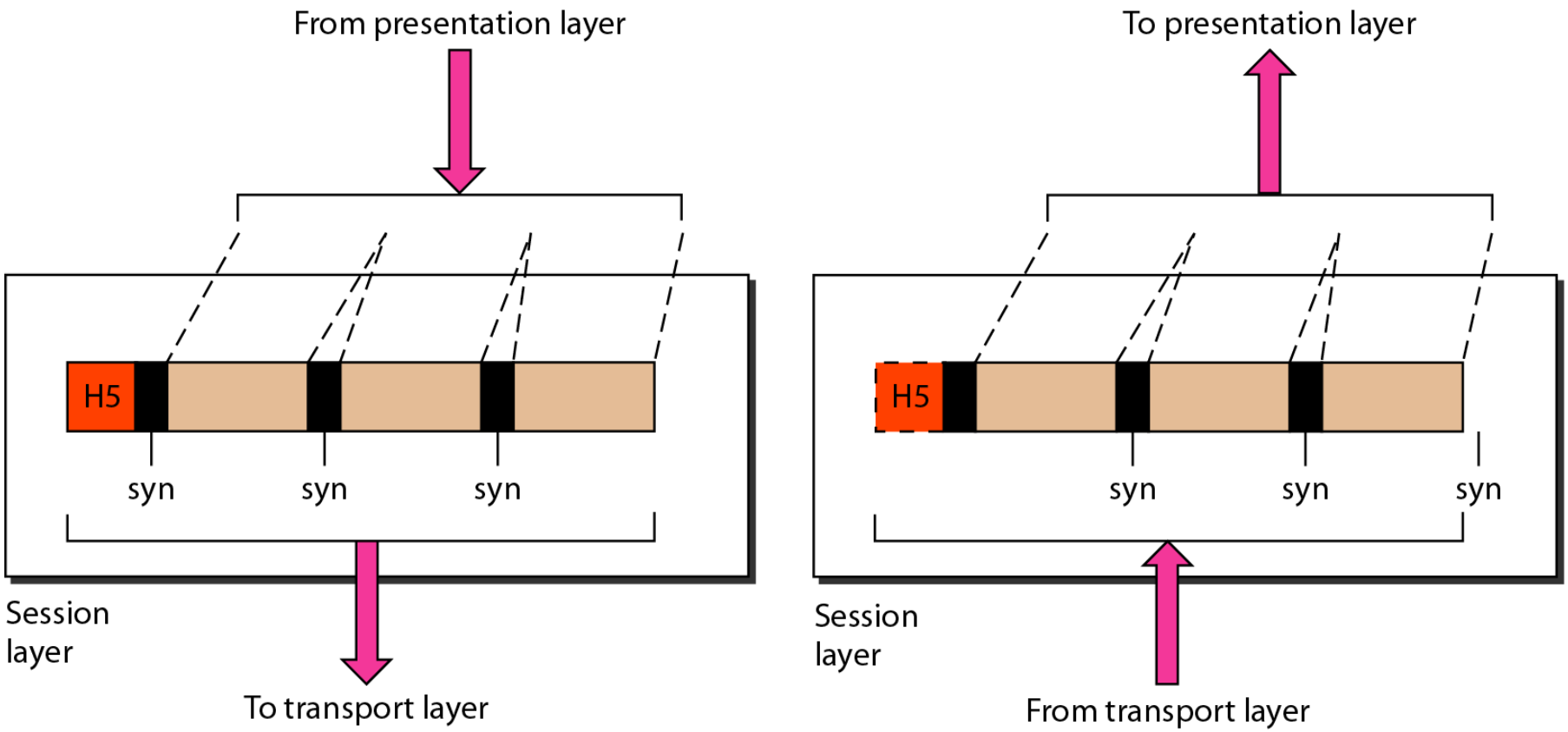

The session layer is responsible for dialog control and synchronization.

Functions of Session Layer

- **Decision Control**:- Half duplex, Full Duplex
- **Synchronization**: Adding checkpoints to stream data.
- Ex: System sending 2000 pages.
- Add check point after each 100th page.
- So in case of failure no need to sent whole page.

Figure 2.13 Presentation layer

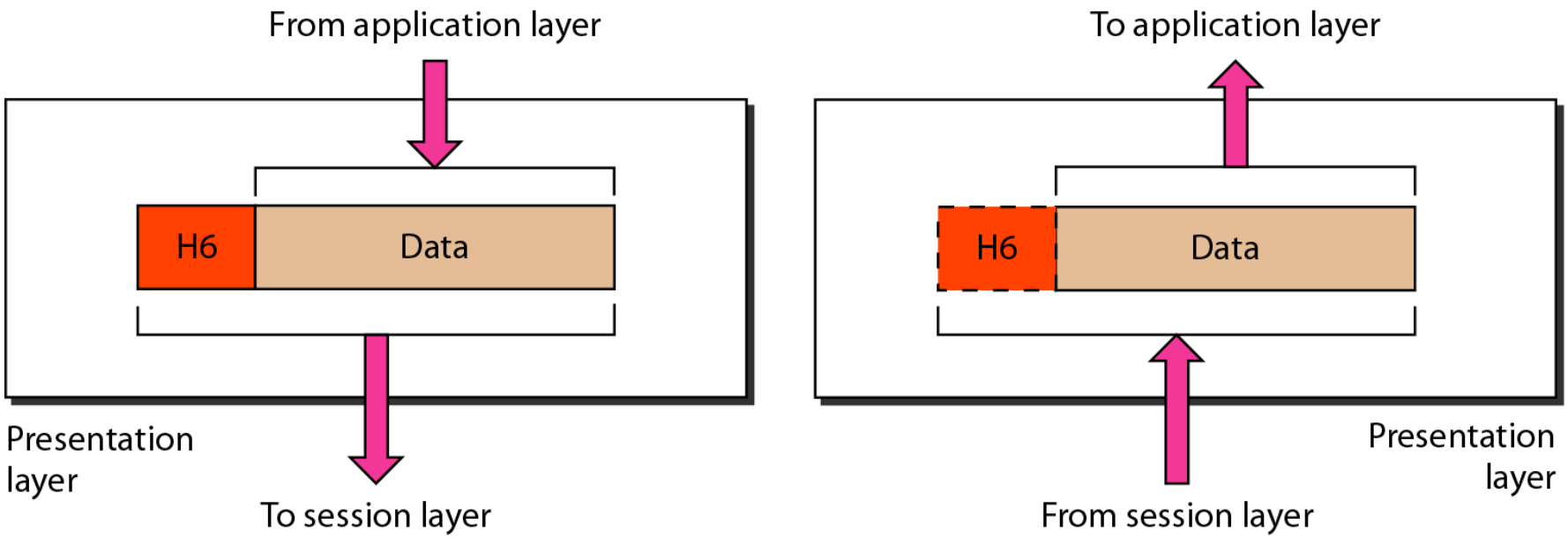

The presentation layer is responsible for translation, compression, and encryption.

Functions of Presentation Layer

- **Translation:** Interoperability b/w different encoding formats.
- **Encryption:** Converting plain to cipher text and vice versa.
- **Compression:** Reducing number of bits in multimedia data when transmitting.

Figure 2.14 Application layer

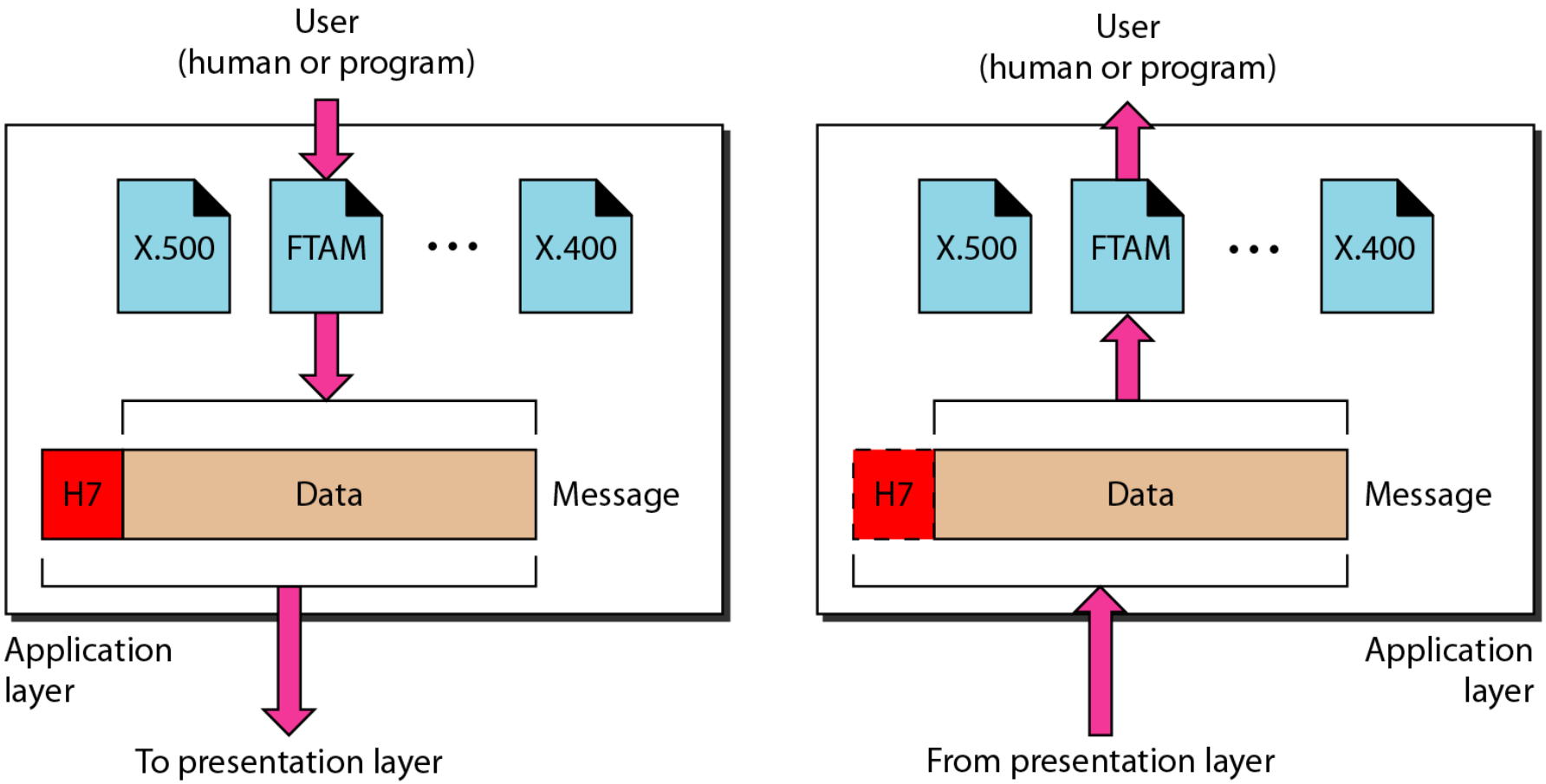

The application layer is responsible for providing services to the user.

Functions of Application Layer

- It provides user access to network.
- X.500-Directory service.
- X.400-Message handling service.
- **FTAM-** File Transfer Access and management.
- Network Virtual Terminal.

Figure 2.15 Summary of layers

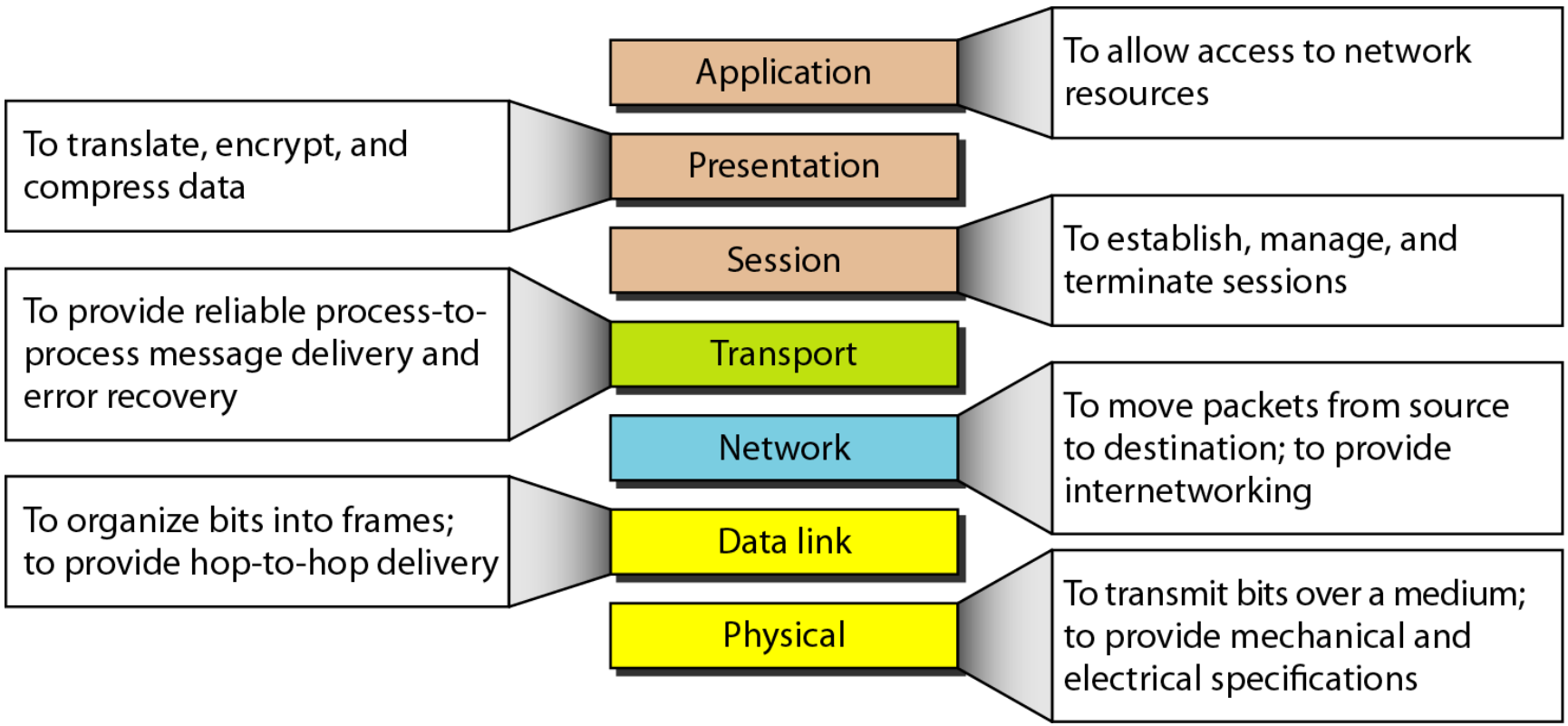

2-4 TCP/IP PROTOCOL SUITE

The layers in the TCP/IP protocol suite do not exactly match those in the OSI model. The original TCP/IP protocol suite was defined as having four layers: host-to-network, internet, transport, and application. However, when TCP/IP is compared to OSI, we can say that the TCP/IP protocol suite is made of five layers: physical, data link, network, transport, and application.

Topics discussed in this section:

Physical and Data Link Layers
Network Layer
Transport Layer
Application Layer

Figure 2.16 TCP/IP and OSI model

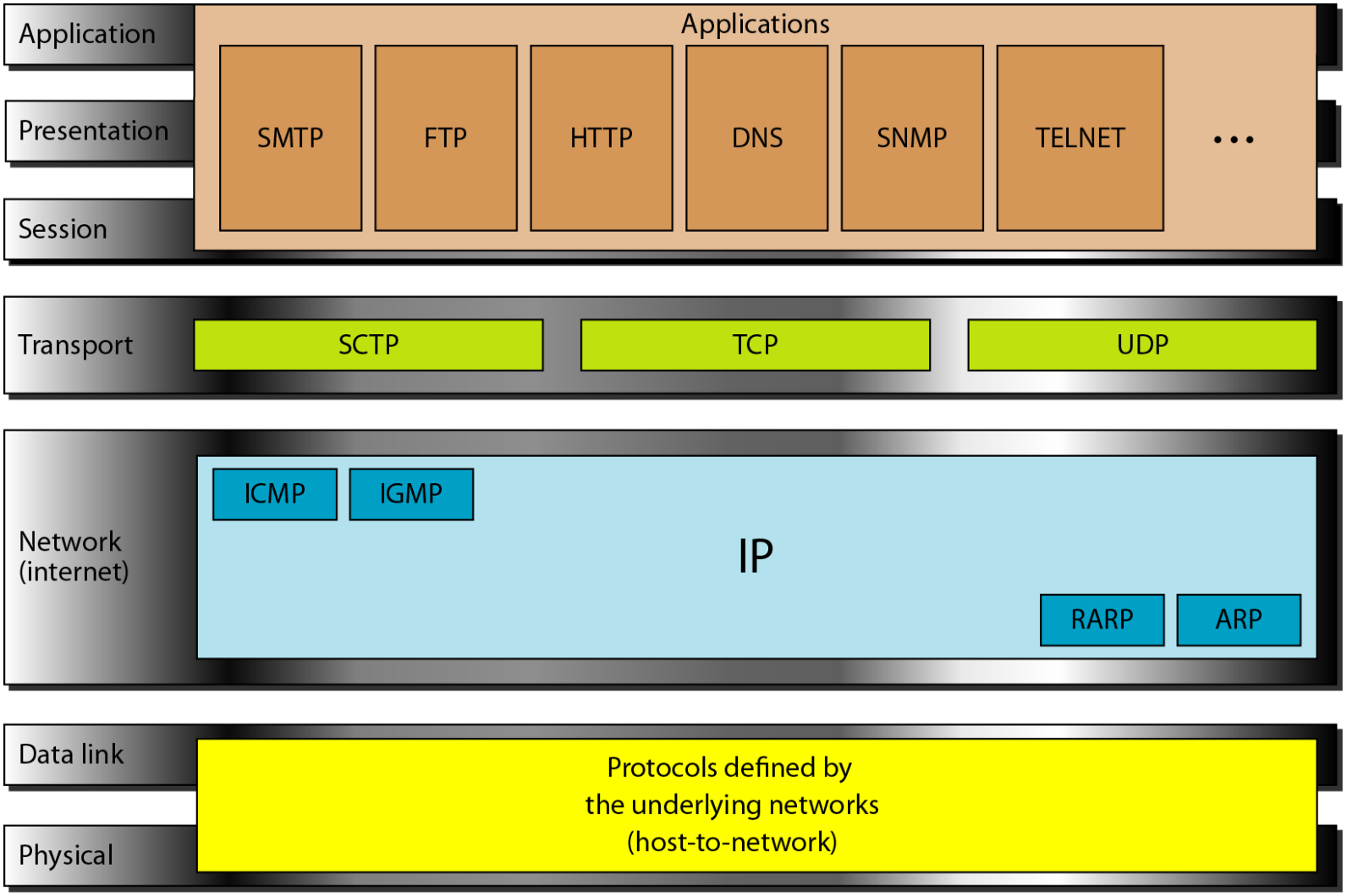

2-5 ADDRESSING

Four levels of addresses are used in an internet employing the TCP/IP protocols: physical, logical, port, and specific.

Topics discussed in this section:

Physical Addresses
Logical Addresses
Port Addresses
Specific Addresses

Figure 2.17 Addresses in TCP/IP

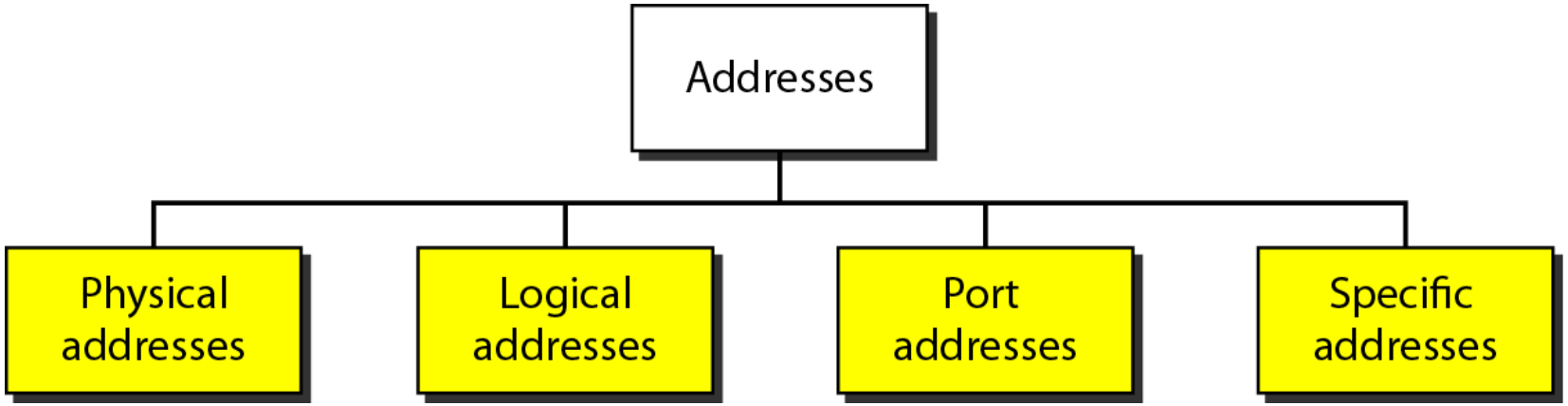

Figure 2.18 Relationship of layers and addresses in TCP/IP

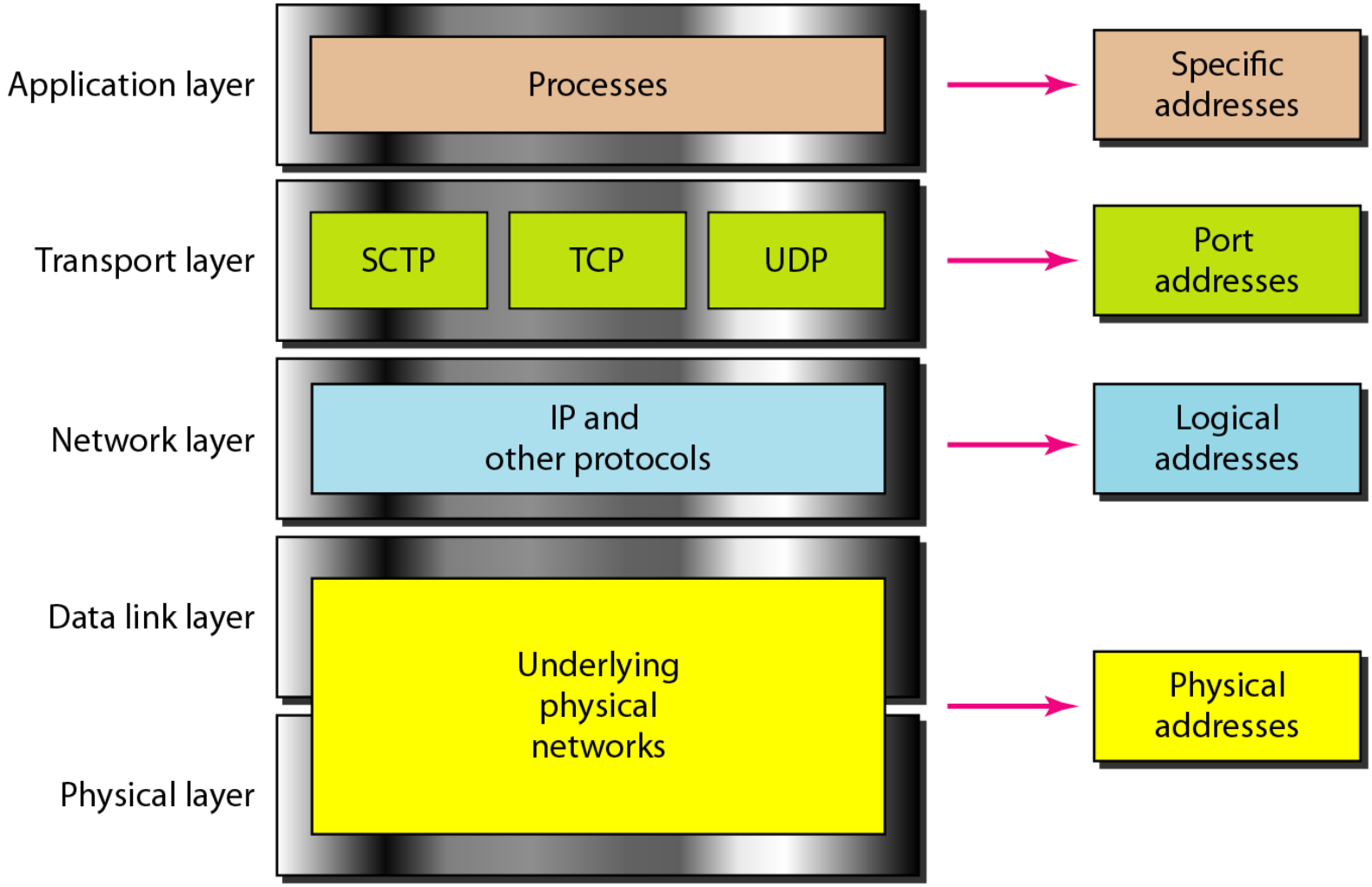

Example 2.1

In Figure 2.19 a node with physical address 10 sends a frame to a node with physical address 87. The two nodes are connected by a link (bus topology LAN). As the figure shows, the computer with physical address 10 is the sender, and the computer with physical address 87 is the receiver.

Figure 2.19 Physical addresses

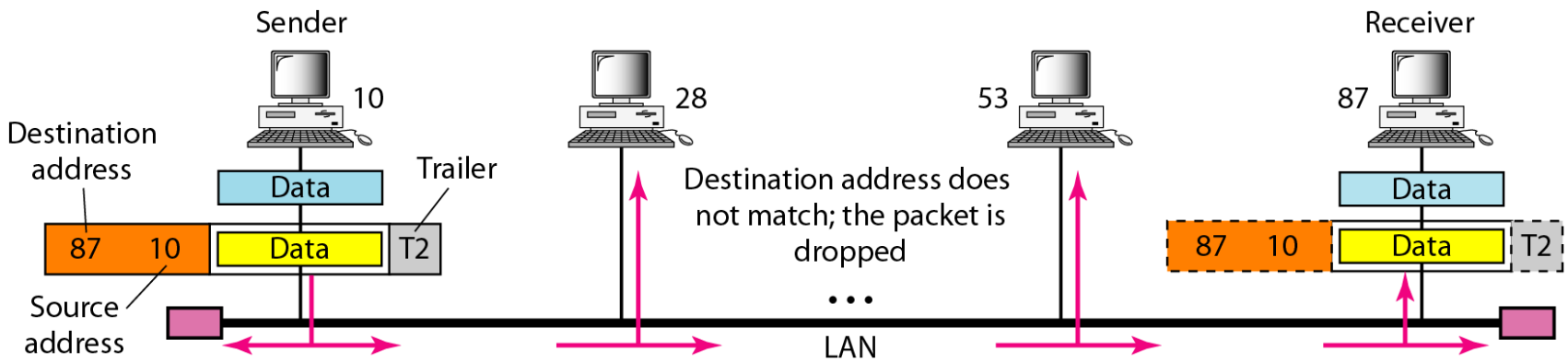

Example 2.2

Most local-area networks use a 48-bit (6-byte) physical address written as 12 hexadecimal digits; every byte (2 hexadecimal digits) is separated by a colon, as shown below:

07:01:02:01:2C:4B

A 6-byte (12 hexadecimal digits) physical address.

Example 2.3

Figure 2.20 shows a part of an internet with two routers connecting three LANs. Each device (computer or router) has a pair of addresses (logical and physical) for each connection. In this case, each computer is connected to only one link and therefore has only one pair of addresses. Each router, however, is connected to three networks (only two are shown in the figure). So each router has three pairs of addresses, one for each connection.

Figure 2.20 IP addresses

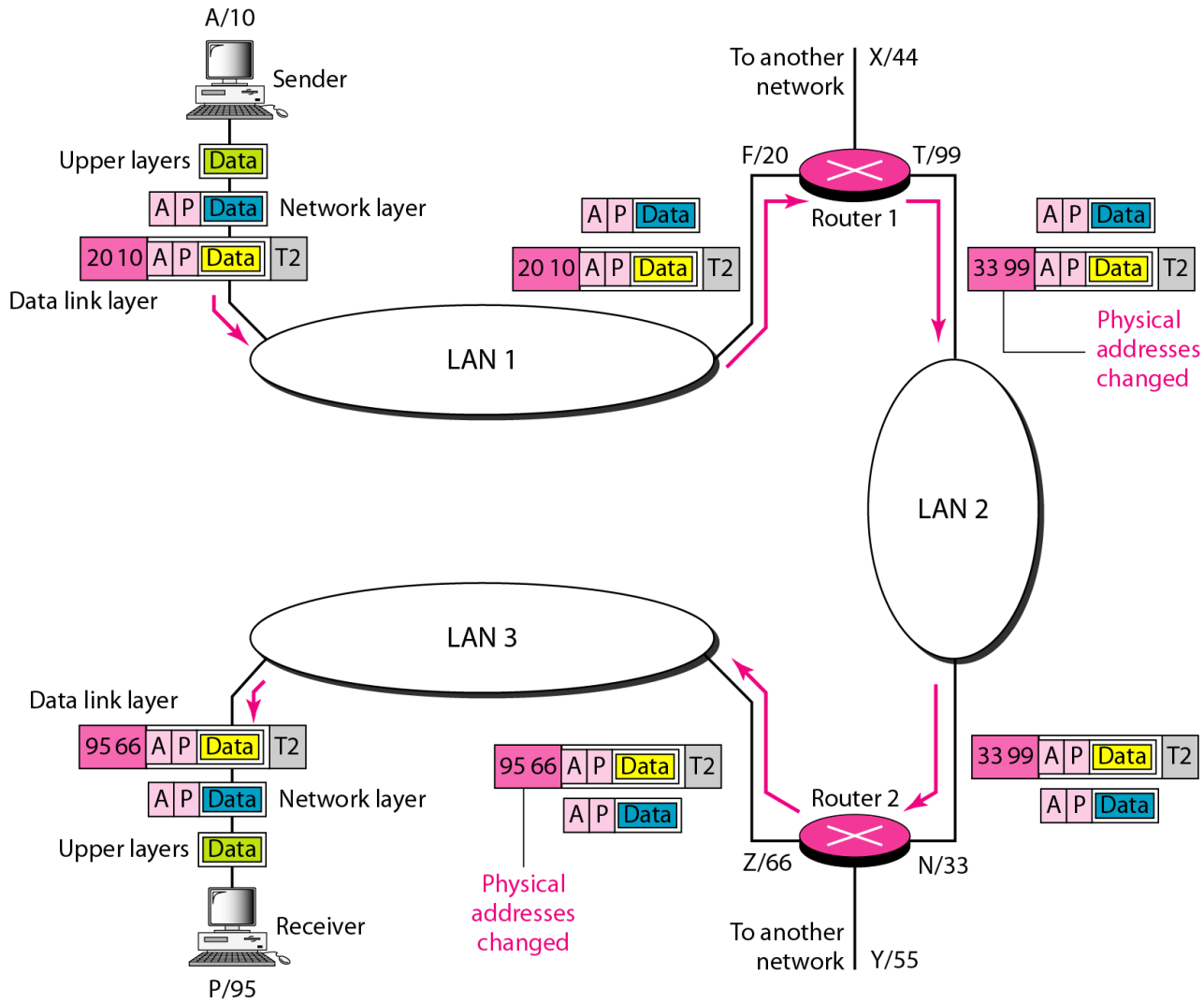

Example 2.4

Figure 2.21 shows two computers communicating via the Internet. The sending computer is running three processes at this time with port addresses a, b, and c. The receiving computer is running two processes at this time with port addresses j and k. Process a in the sending computer needs to communicate with process j in the receiving computer. Note that although physical addresses change from hop to hop, logical and port addresses remain the same from the source to destination.

Figure 2.21 Port addresses

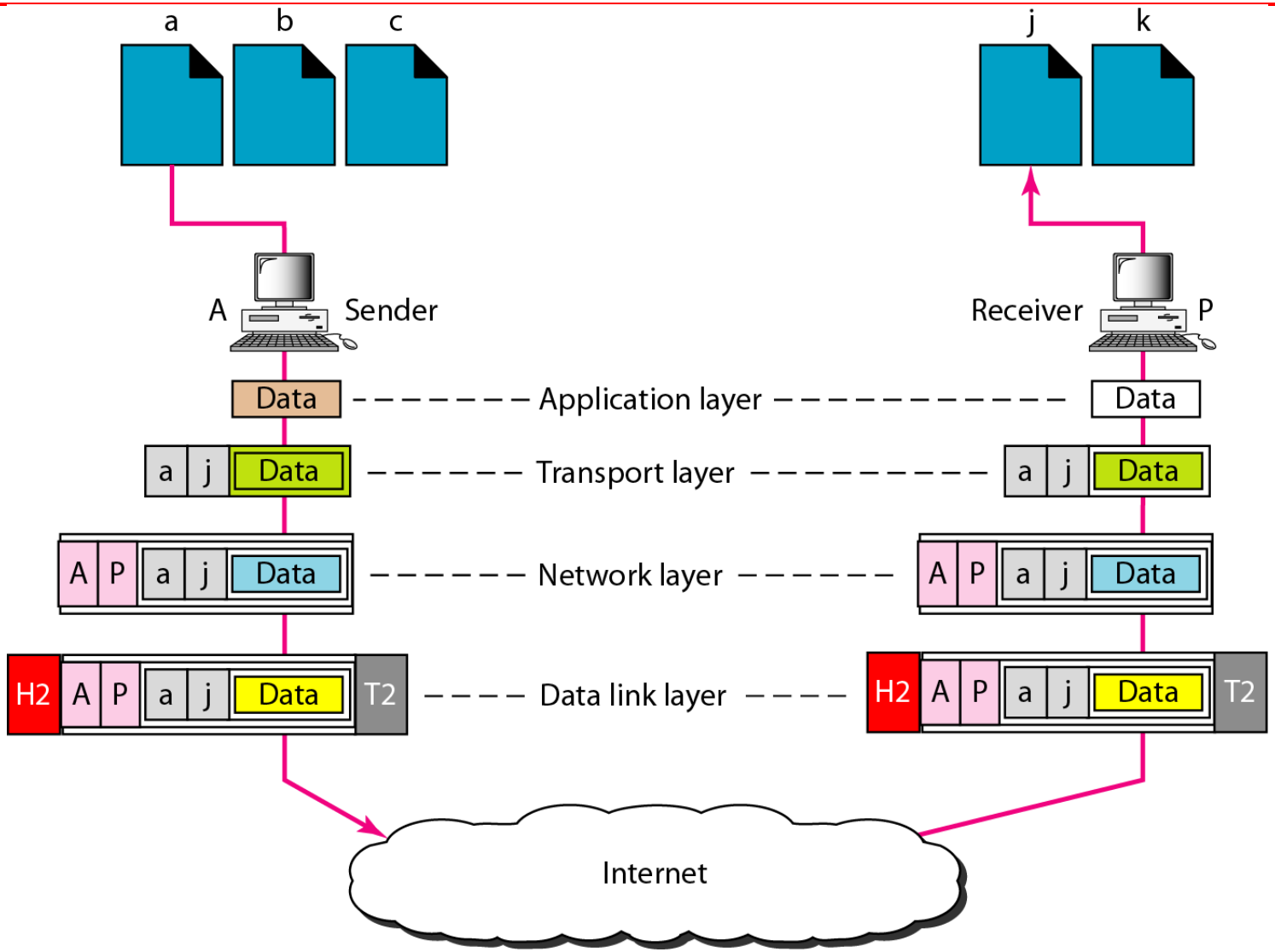

Note

The physical addresses will change from hop to hop, but the logical addresses usually remain the same.

Example 2.5

A port address is a 16-bit address represented by one decimal number as shown.

753

A 16-bit port address represented as one single number.